BTMF Thermal Mass Flow Meter

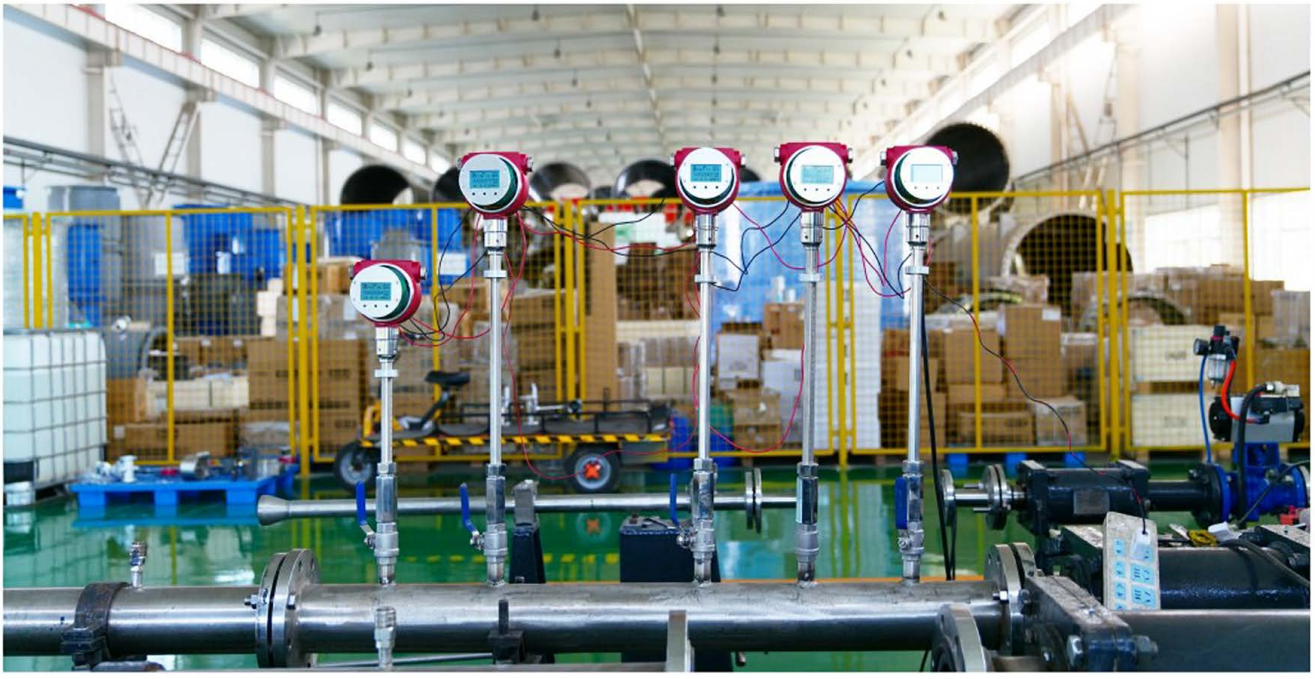

Main Features

◆ Real mass flowmeter, no temperature and pressure compensation for gas flow measurement, convenient and accurate measurement. The mass flow or standard volume flow of the gas can be obtained.

◆ Wide range ratio, can measure the gas flow rate as high as 100Nm/s as low as 0.1Nm/s.

◆ Digital design. Overall digital circuit measurement, accurate measurement and easy maintenance.

◆ Using RS-485 communication or HART communication can realize factory automation and integration.

◆ Instantaneous flow unit: Nm^3/h, Nm^3/min, NL/h, NL/min, t/h, t/min, kg/h, kg/min.

◆ Cumulative flow unit: Nm^3, NL, t, kg.

◆ Insert type: Easy to install and maintain. Non-stop production installation and maintenance can be achieved where field conditions permit. (requires special customization)

Measuring Medium

Oxygen, nitrogen, hydrogen, compressed air and other clean single medium.

ABZAR TAMIN ARSHIA CO.

Thermal Mass Flow Meter

Flow Range Sheet

Termal mass Nm^3/h					
DN10	1.7–17	DN80	108–1080	DN400	2700–27000
DN15	4–40	DN100	168–1680	DN450	3420–34200
DN20	6–60	DN125	264–2640	DN500	4200–42000
DN25	10–100	DN150	378–3780	DN600	6000–60000
DN32	17–170	DN200	600–6000	DN700	8100–81000
DN40	27–270	DN250	1000–10000	DN800	10800–108000
DN50	36–360	DN300	1500–15000	DN900	13800–138000
DN65	72–720	DN350	2100–21000	DN1000	16800–168000

Technical Data

Item	Parameters
Nominal diameter	DN10–3000mm
Power supply	24VDC+220VAC dual power supply
Material	SS304, SS316
Medium temperature	–20–250℃
Rated pressure	1.0–4.0 MPa
Connection type	Flange connection (DN15–400mm) Insertion type (DN65–1000mm; DN1200–3000mm)
Flange standard	GB, ANSI, DIN, JIS
Protection level	IP65
Ball valve	SS304, 3/4"
Output communication	Pulse, 4–20mA, RS485 MODBUS, Hart
Explosion proof	Ex ia IIC T6 Ga

www.arshiatamin.com
+98-21-66572717
info@arshiatamin.com
+98-998-1201514

Dimension

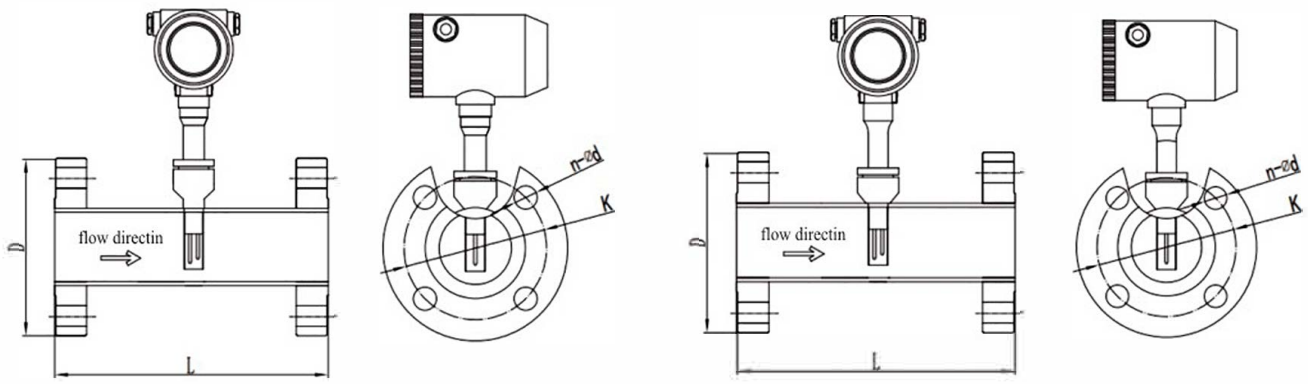

DN10-32mm

DN40-300mm

Technical Requirements

1.Thermal Gas Mass Flowmeter flange dimensions shall conform to HG/T 20592–2009

2.Thermal Gas Mass Flowmeter height 10mm

Inch	DN	MPa	L (mm)	D (mm)	K (mm)	H (mm)	n–Ød1
3/8	10	1.6	250	90	60	280	4–Ø14
1/2	15	1.6	250	95	65	285	4–Ø14
3/4	20	1.6	250	105	75	295	4–Ø14
1	25	1.6	250	115	85	325	4–Ø14
1 1/4	32	1.6	250	140	100	345	4–Ø18
1 1/2	40	1.6	250	150	110	340	4–Ø18
2	50	1.6	250	165	125	350	4–Ø18
2 1/2	65	1.6	250	185	145	370	8–Ø18
3	80	1.6	250	200	160	385	8–Ø18
4	100	1.6	300	220	180	405	8–Ø18
5	125	1.6	300	250	210	430	8–Ø18
6	150	1.6	300	285	240	460	8–Ø22
8	200	1.6	350	340	295	520	12–Ø22
10	250	1.6	400	405	355	580	12–Ø26
12	300	1.6	450	460	410	630	12–Ø26

ABZAR TAMIN ARSHIA CO.

Thermal Mass Flow Meter

Selection Table

BTMF	XXX	X	X	X	X	X	X	X	X
Nominal diameter (mm)	Nominal Diameter Coding								
Design pressure	PN10 PN16 PN25 PN40	PN*							
	A15: ANSI 150# A30: ANSI 300# A60: ANSI 600#	A*							
	others(eg.J10: JIS 10K; D16:DIN PN16)	*							
Connection	flange		1						
	tri-clamp		2						
	thread		3						
	wafer		4						
	plug-in		5						
Signal Output	Pulse+4-20mA			A					
	4-20mA+ RS485 + Pulse			B					
	4-20mA + HART			C					
Power supply	220VAC				1				
	24VDC				2				
	220VAC+24VDC				3				
Structure	Compact type					C			
	Remote type					R			
Design temperature	-20-180℃						S		
	-20-250℃						N		
	-20-350℃						H		
Material	SS304							1	
	SS316							2	
Anti-explosion	Non-explosion proof								N
	Exd II BT6								H

Nominal Diameter Coding Table	
Nominal diameter	Coding
15	015
20	020
25	025
32	032
40	040
50	050
65	065
80	080
100	110
125	112
150	115
200	120
250	125
300	130
400	140
450	145
500	150
600	160
700	170
800	180
900	190
1000	210
1200	212
1400	214
1500	215
1600	216
1800	218
2000	220